Home computer **NMS8245/00/16**

Service
Service
Service

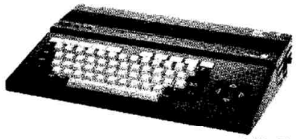

42 935 A12

Safety regulations require that the set be restored to its original condition and that parts which are identical with those specified be used.

Service Manual

(GB) SPECIFICATION

Microprocessor	: Z80A
Memory	: 48k ROM 16k disk ROM 128k video RAM 128k user RAM
Video processor	: V9938
MSX controller	: S-3527
Floppy-disk drive	: 3.5",1 MB
Interfaces	: RF output (UHF channel E36) Monitor output SCART Cassette recorder 2 joysticks Printer 2 cartridge slots
Keyboard	: QWERTY/00/16
Power supply voltage	: 220 V ± 10%, 50Hz

(NL) SPECIFICATIE

Microprocessor	: Z80A
Geheugen	: 48k ROM 16k disk ROM 128k video RAM 128K gebruikers RAM
Video processor	: V9938
MSX controller	: S-3527
Floppy-disk drive	: 3.5",1 MB
Interfaces	: RF uitgang (UHF kanaal E36) Monitor uitgang SCART Cassette recorder 2 handbedieningen Printer 2 cartridge sleuven
Toetsenbord	: QWERTY/00/16
Voedingsspanning	: 220 V ± 10%, 50Hz

(F) CARACTERISTIQUES TECHNIQUES

Microprocesseur	: Z80A
Mémoire	: 48k ROM 16k ROM à disque 128k RAM vidéo 128k RAM utilisateur
Processeur vidéo	: V9938
Contrôle MSX	: S-3527
Lecteur de disquette	: 3.5",1 MB
Interfaces	: Sortie RF (Canal UHF E36) Sortie monitor SCART Magnétophne cassette 2 poignées Imprimante 2 "slots" cartouche
Clavier	: QWERTY/00/16
Tension d'alimentation	: 220 V ± 10%, 50Hz

(D) TECHNISCHE DATEN

Microprozessor	: Z80A
Speicher	: 48k ROM 16k Disk-ROM 128k Video-RAM 128k Gebrauchers-RAM
Videoprozessor	: V9938
MSX-Steuereinheit	: S-3527
Floppy Disk-Laufwerk	: 3.5",1 MB
Schnittstellen	: RF Ausgang (UHF Kanal E36) Monitorausgang SCART Cassettenrecorder 2 Handbedienungen Drucker 2 Kassettenschlitze
Tastatur	: QWERTY/00/16
Versorgungsspannung	: 220 V ± 10%, 50Hz

(I) DATA TECHICI

Microprocessore	: Z80A
Memoria	: 48k ROM 16k ROM A disco 128k RAM video 128k RAM utilizzaton
Processore video	: V9938
MSX di controllo	: S-3527
Lettore di dischetto	: 3.5",1 MB
Interfaccie	: Uscita RF (Canale UHF E36) Uscita monitore SCART Registratore a cassetta 2 leve manuali Stampa 2 connettore per cartuccia
Tastiera	: QWERTY/00/16
Tensione di aliment.	: 220 V ± 10%, 50Hz

DocumentationTechnique Service Dokumentation Documentazione di Servizio Huolto-Ohje Manual de Servicio Manual de Serviço

Subject to modification
4822 727 16027
Printed in The Netherlands
© Copyright reserved

PHILIPS Published by Consumer Electronics
CS 11 823

Scanned and converted to PDF 2001, 2017 Hans Otten, Abuur

(GB)

CAUTION

1. The exchange of cartridges should take place with the set turned off.

2. ESD

All ICs and many other semi-conductors are susceptible to electrostatic discharges (ESD). Careless handling during repair can reduce life drastically.
When repairing, make sure that you are connected with the same potential as the mass of the set via a wrist wrap with resistance.
Keep components and tools also at this potential.

ADJUSTMENTS

VDP Clock frequency

- Connect a frequency counter to 8-U15 via a 10:1 probe.
- Adjust TC2 for a frequency of 3,554,685 ± 200 Hz on 8-U15.

FDC

1. Read-pulse width

- Connect an oscilloscope to 29-U8 via a 10:1 probe.
- Switch the computer on.
- Connect 22-U8 to ground.
- Adjust the pulse width on 29-U8 for 400 ± 100 ns with the aid of VR1, see figure 1.
- Interrupt the connection between 22-U8 and ground.

2. VCO frequency

- Connect a frequency counter to 16-U8 via a 10:1 probe.
- Switch the computer on.
- Connect 22-U8 to ground.
- Adjust the frequency on 16-U8 for 255 ± 5 kHz with the aid of VR2.
- Interrupt the connection between 22-U8 and ground.

RTC clock frequency

- Connect a frequency counter to 17-U13 via a 10:1 probe.
- Adjust TC1 for a frequency of 32.768 kHz on 17-U3.

Encoder unit

- Connect a frequency counter to 17-U1 via a 10:1 probe.
- Adjust TC1 for a frequency of 4,433,619 ± 20 Hz on 17-U1.

Floppy Disk Drive

1. Required measuring equipment

- Dual trace oscilloscope, for example PM3211.
- Alignment disk, code nummer 4822 395 30274.
- FDD test cartridge, code nummer 4822 397 30171.

2. Use of the FDD test cartridge

- Switch the computer off and insert the FDD cartridge.
- Switch the computer on again.
- Type: "CALL FDDTEST" and press the <RETURN> key.
- Select the disk drive test.
- The functions in the disk drive test are used for adjusting the disk drive.

3. Radial alignment

A) - Connect channel A of the oscilloscope via a 10:1 probe with test point TP1 (for a survey of the test points, see figure 2).
- Connect channel B via a 10:1 probe with test point TP2.
- Connect the mass terminal of the probe with TP3.
- Oscilloscope alignments:
  - Trigger externally with the index signal (on connector J1, pin 1).
  - Sensitivity time basis: 20 ms/div.
  - Sensitivity channel A and channel B: 5mV/div.
  - Invert channel B.
  - Add channel A and channel B.

B) - Place the alignment disk in the drive and read track 40, side 0 (with <F3>).
- Check that the cat's eye pattern (see figure 3) is visible on track 40.
- If the correct cat's eye pattern is not visible, stop the reading action (with <ESC>).
- Loosen the screws A (see figure 4) of the stepping motor a quarter turn.
- Read track 40, side 0 continuously (with <F3>).
- Rotate the stepping motor until all lobes of the cat's eye pattern have the same amplitude.
- Tighten the screws A of the stepping motor again and check the cat's eye pattern once more. Repeat the alignment, if necessary.
- Stop the reading action with <ESC>.
- Read track 00, side 0 (with <F3>) and increase the track number with the <CURSOR UP> key to track 40.
  Check the cat's eye pattern again.
- Stop the reading action (with <ESC>).
- Read track 79, side 0 (with <F3>) and lower the track number to track 40 with the <CURSOR DOWN> key.
  Check the cat's eye pattern again.

4. Alignment track 00 sensor

Method 1

- First check the radial alignment.
- Carry out point A of the radial alignment, however with the sensitivity of the time base at 5 µs/div. and trigger on channel A.
- Insert the alignment disk into the drive and read track 00, side 0 (with <F3>).
- Check whether a 62.5 kHz signal (a '1F' data pattern) is present on track 00.
- If the signal is not present, loosen the screw of the track 00 sensor a quarter turn and adjust the track 00 sensor until the 62.5 kHz signal will be visible.
- Tighten the screw of the track 00 sensor again.
- Check if the 62.5 kHz signal is only present on track 00 and not on track 01.

Method 2

- First check the radial alignment.
- Connect the input of the oscilloscope with test point TP5 and ground.
- Insert a disk into the drive and read track 00, side 0 (with <F3>).
- Increase the track number to track 02 (with the <CURSOR UP>key) and measure the voltages across the track 00 sensor. These voltages should be:
  - 3.5V on track 00
  - 1.5V on track 01
  - 0.5V on track 02
- If the measured values do not correspond with the values given above, decrease the track number by 1 to track 01.
- Loosen the screw of the track 00 sensor a quarter turn.
- Adjust the track 00 sensor until the voltage across the sensor is 1.5V at track 01.
- Tighten the screw of the track 00 sensor again.
- Check the voltages across the sensor at track 00, track 01 and track 02.

5. Azimuth inspection

- Carry out point A of the radial alignment, however with the sensitivity of the time base at 0.5 ms/div.
- Place the alignment disk into the drive and read track 40, side 0 (with <F3>).
- Check the azimuth burst wave pattern (see figure 5).
- A tolerance of ±30' is allowed. Greater deviations may cause compatibility problems. The head unit cannot be adjusted further.

6. Index burst alignment

- Connect channel A of the oscilloscope via a 10:1 probe with test point TP1.
- Connect channel B via a 10:1 probe with the index signal (on connector J1, pin 1).
- Connect the mass terminal of the probe, connected to channel A, with TP3.
- Oscilloscope alignments:
  - Trigger on channel B.
  - Sensitivity time base: 0.1 ms/div.
  - Sensitivity channel A: 2 mV/div.
  - Sensitivity channel B: 0.2V/div.
- Loosen the screw of the index sensor a quarter turn.
- Insert the alignment disk into the floppy drive and read track 40, side 0 (with <F3>).
- Adjust the index sensor so, that the period time T becomes 400 ± 200 μs (see fig. 6).
- Tighten the screw of the index sensor again and check the alignment once more.

7. Side 1

- Check alignments 3 to 6 for side 1.

8. Speed of spindle motor

- Connect an oscilloscope via a 10:1 probe to connector J1, pin 1 (index) and connect the mass terminal of the probe with TP3.
- Adjust the period time of the index pulse for 200 ± 0.5 ms by means of a screwdriver in alignment point A (see figure 7) of the spindle motor.

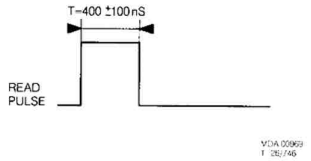

Fig. 1

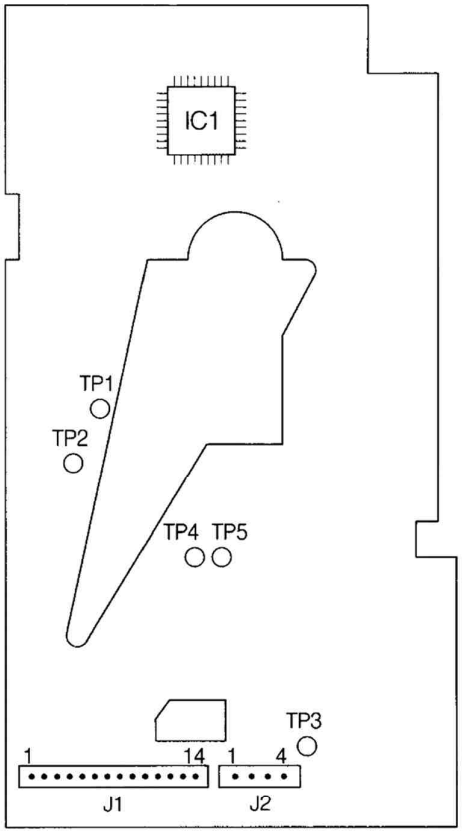

MDA.00886
T28/746

Fig. 2

FDD PARTS LIST

1	4822 535 92418	Spindle motor
2	4822 404 60409	Holder assy
3	4822 432 10645	Front
4	4822 358 20269	Belt
6	4822 212 22664	Complete PCB
7	4822 404 60411	Bracket
8	4822 362 10265	Stator stepper motor
9	4822 362 20234	Rotor stepper motor

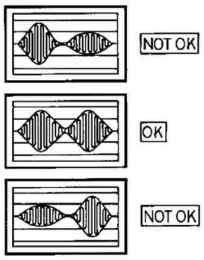

Fig. 3 39 578 A12

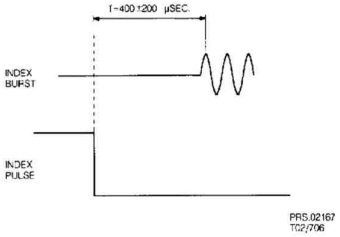

Fig. 6

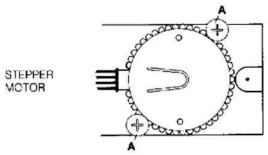

Fig. 4

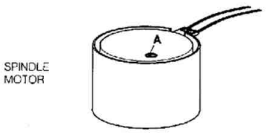

Fig. 7 MDA. 00885

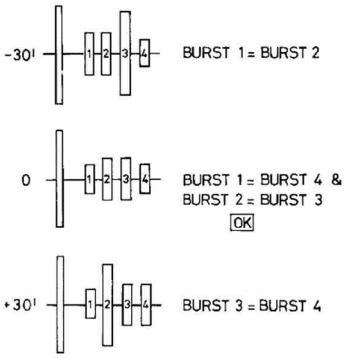

Fig. 5 39 580 A12

CS 11 831

WIRING DIAGRAM

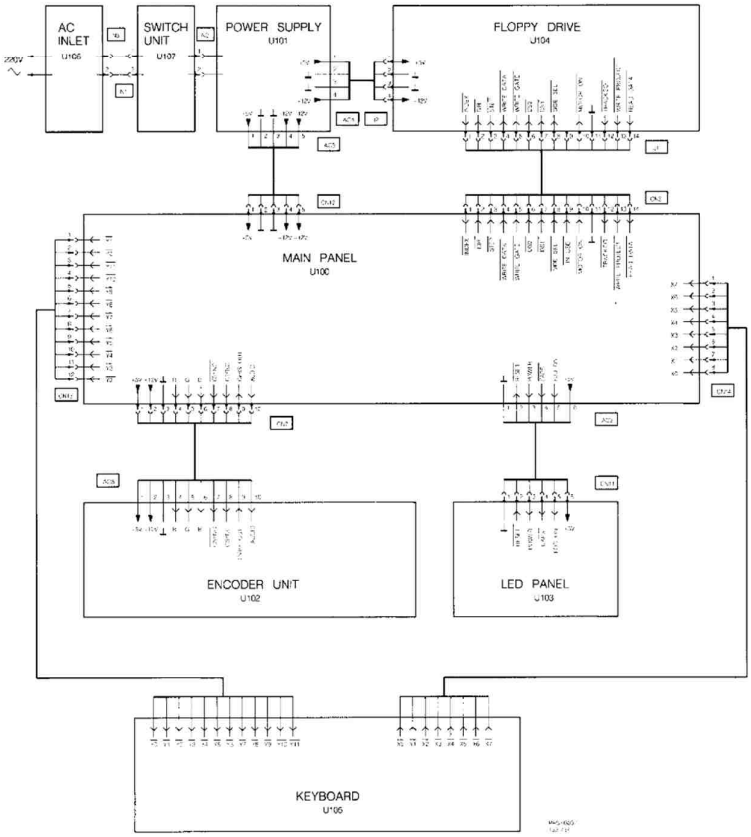

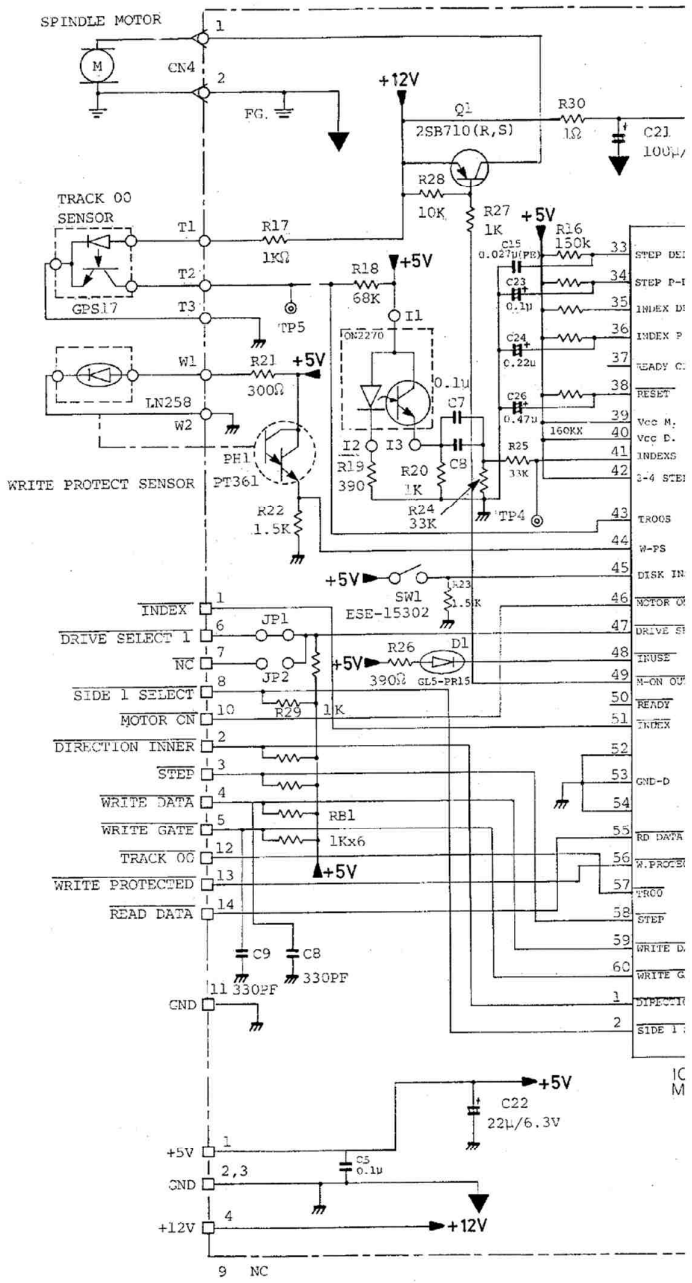
SPINDLE MOTOR
CN4
FG.
+12V
Q1
2SB710(R,S)
R30
1Ω
C21
R28
10K
R27
1K
+5V
R16
150k
TRACK 00
SENSOR
GPS17
T1
T2
T3
R17
1KΩ
R18
68K
TP5
I1
ON2270
0.1μ
C7
C8
I2
I3
R19
390
R20
1K
R24
33K
TP4
R25
33K
160KX
C15
0.027μ(PE)
C23
0.1μ
C24
0.22μ
C26
0.47μ
W1
W2
R21
300Ω
LN258
PH1
PT361
WRITE PROTECT SENSOR
R22
1.5K
SW1
ESE-15302
R23
1.5K
INDEX
DRIVE SELECT 1
NC
SIDE 1 SELECT
MOTOR ON
DIRECTION INNER
STEP
WRITE DATA
WRITE GATE
TRACK 00
WRITE PROTECTED
READ DATA
JP1
JP2
R26
390Ω
D1
GL5-PR15
R29
1K
RB1
1Kx6
C9
330PF
C8
330PF
GND
C22
22μ/6.3V
C5
0.1μ
+5V
GND
+12V
9 NC
STEP DE
STEP P-I
INDEX D
INDEX P
READY C
RESET
Vcc M.
Vcc D.
INDEXS
3-4 STE
TROOS
W-PS
DISK IN
MOTOR O
DRIVE S
INUSE
M-ON OU
READY
INDEX
GND-D
RD DATA
W.PROTE
TROO
STEP
WRITE D
WRITE G
DIRECTI
SIDE 1

ELECTRICAL DIAGRAM FDD

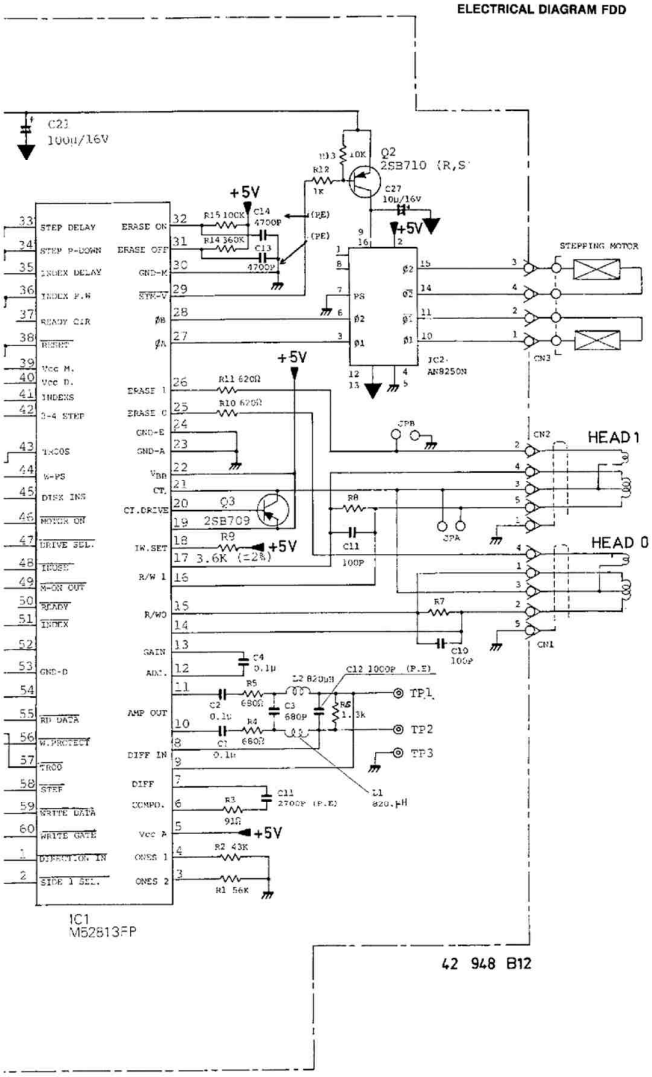

42 948 B12

CS 11 833

FUNCTIONAL DIAGRAM

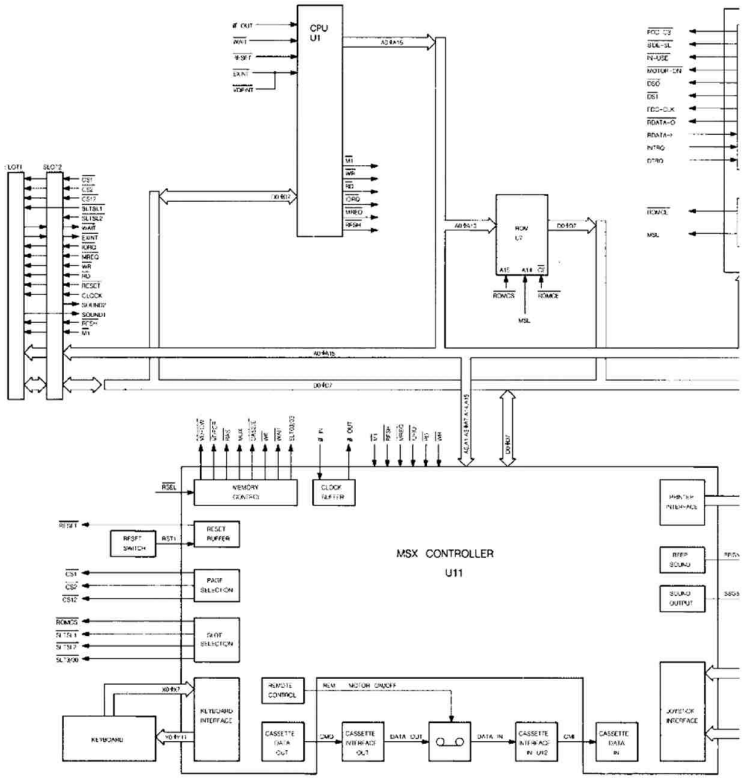

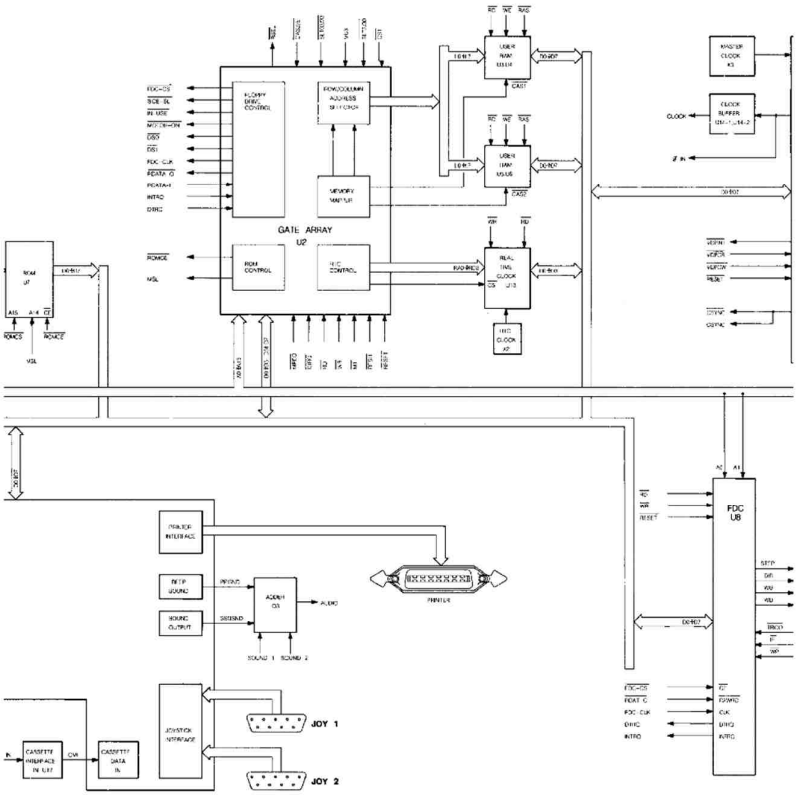
GATE ARRAY
U2
FDC
U8
JOY 1
JOY 2

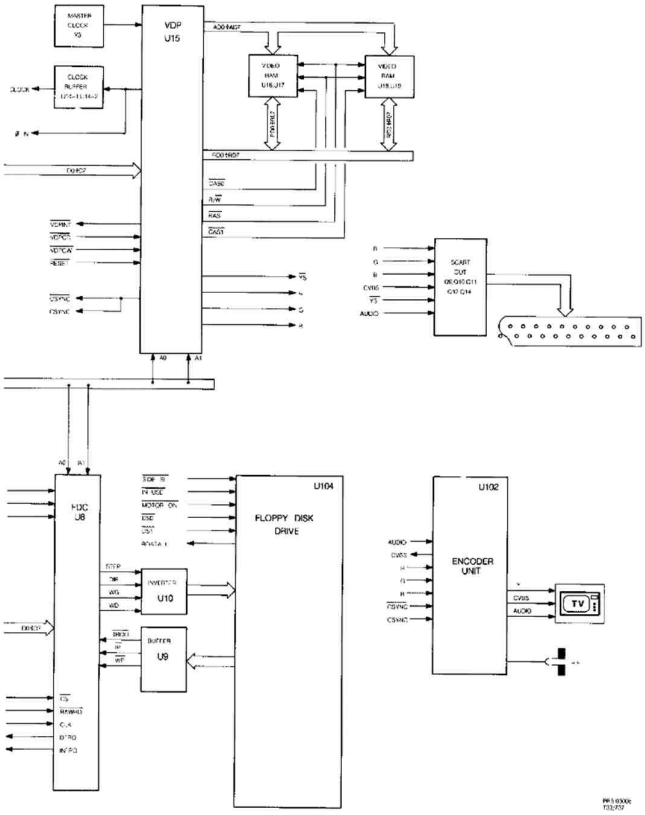
MASTER CLOCK X3
VDP U15
CLOCK BUFFER
VIDEO RAM U16,U17
VIDEO RAM U18,U19
SCART OUT
FDC U8
U104
FLOPPY DISK DRIVE
INVERTER U10
BUFFER U9
U102
ENCODER UNIT
TV

CS 11 835

LAY-OUT KEYBOARD MATRIX FOR SPANISH VERSION

X0	X1	X2	X3	X4	X5	X6	X7	
0	1	2	3	4	5	6	7	Y0
8	9	–	=	\	[	]	Ñ	Y1
/	:	,	.	/	DEAD KEY	A	B	Y2
C	D	E	F	G	H	I	J	Y3
K	L	M	N	O	P	Q	R	Y4
S	T	U	V	W	X	Y	Z	Y5
	CTRL		⇧		F1	F2	F3	Y6
F4	F5	ESC	TAB	STOP	⇦	SELECT	↵	Y7
SPACE	HOME	INS	DEL	←	↑	↓	→	Y8
⇧								Y9
		GRPH						Y10
				CODE				Y11

PIN LAYOUT CARTRIDGE SLOTS

CN1

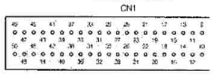

CN2

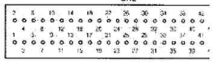

CN1 SLOT1

TYPENUMBERS AND POWERSUPPLY-CONNECTIONS OF IC'S				
POS.NR	TYPE	DESCRIPTION	+5V	⊥
U9	74LS14	6 SCHT. INVERTERS	14	7
U10	74HC	6 INVERTERS OPEN COLLECTORS	14	7
U11	74LS04	6 INVERTERS	14	7

POWER SUPPLY

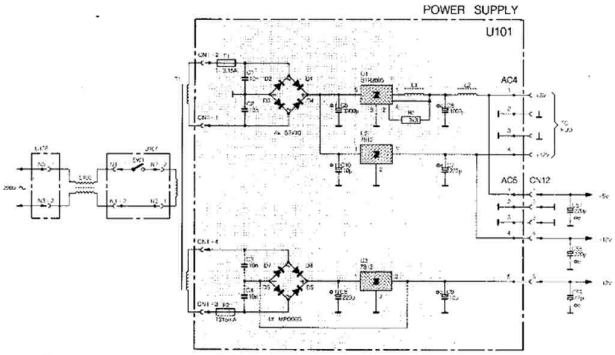

CS 11 836

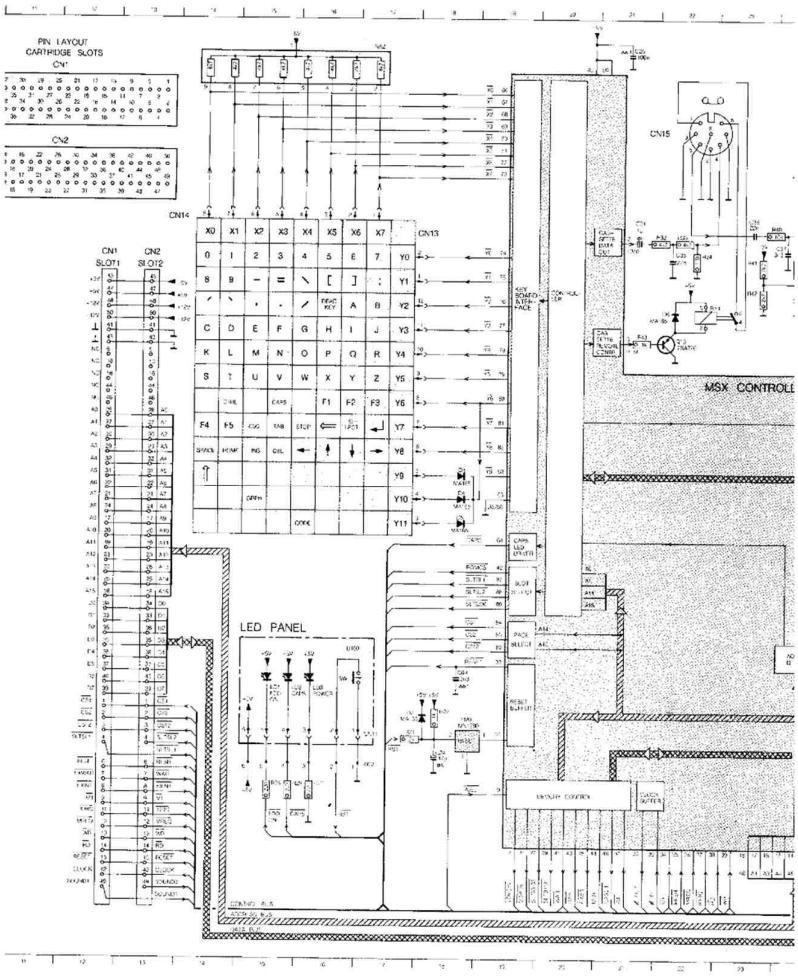
PIN LAYOUT
CARTRIDGE SLOTS
CN1
CN2
CN14
CN13
CN15
CN1
SLOT1
CN2
SLOT2
LED PANEL
MSX CONTROLL

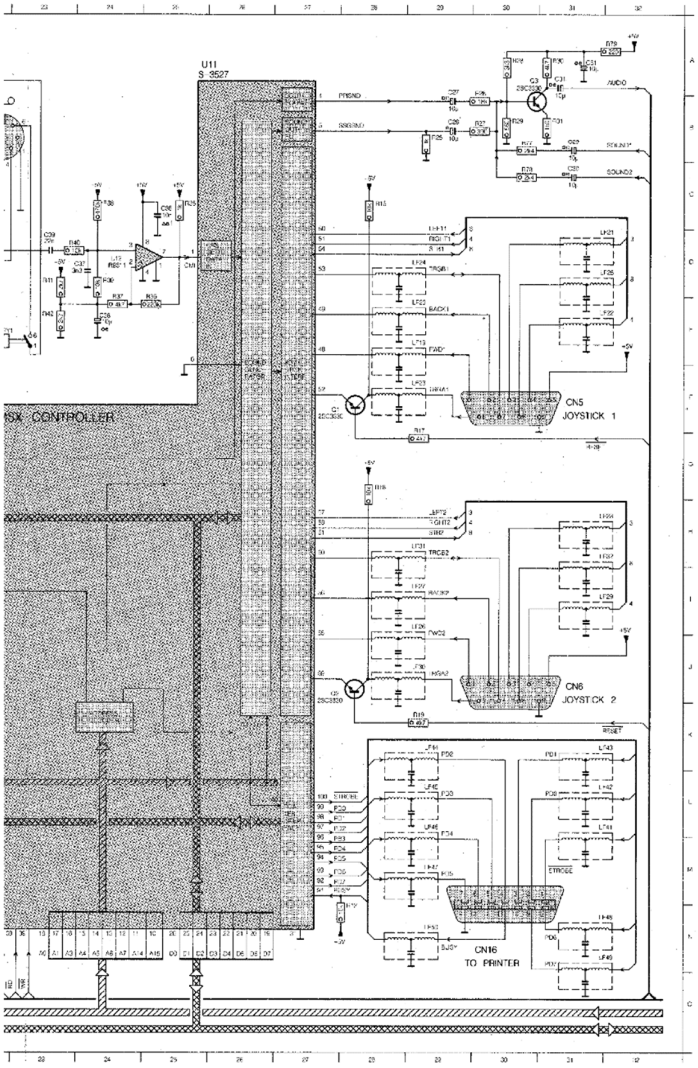
U11
S-9527
MSX CONTROLLER
CN5
JOYSTICK 1
CN6
JOYSTICK 2
CN16
TO PRINTER
AUDIO
SOUND1
SOUND2
STROBE

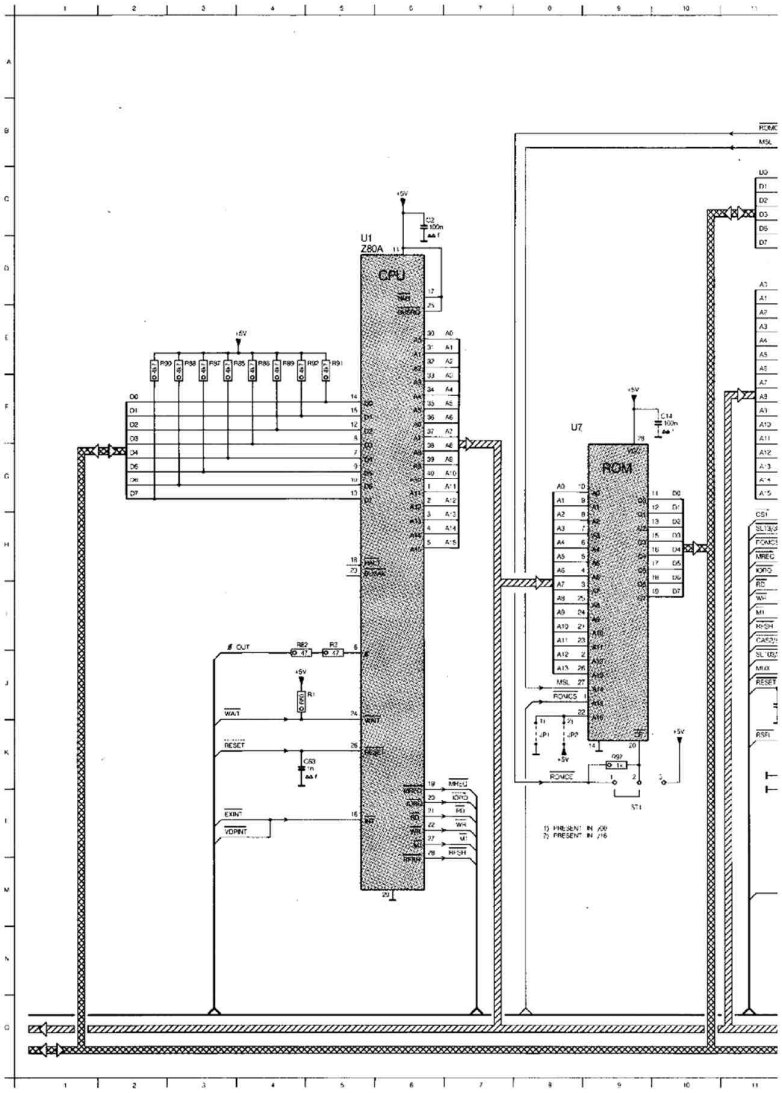
U1
Z80A
CPU
U7
ROM
+5V
C2
100n
C14
100n
R90
R88
R87
R85
R86
R89
R92
R91
D0
D1
D2
D3
D4
D5
D6
D7
A0
A1
A2
A3
A4
A5
A6
A7
A8
A9
A10
A11
A12
A13
A14
A15
MSL
ROMCS
ROMCE
JP1
JP2
R82
R3
R1
CS1
WAIT
RESET
EXINT
VDPINT
MREQ
IORQ
RD
WR
M1
RFSH
1) PRESENT IN /00
2) PRESENT IN /16

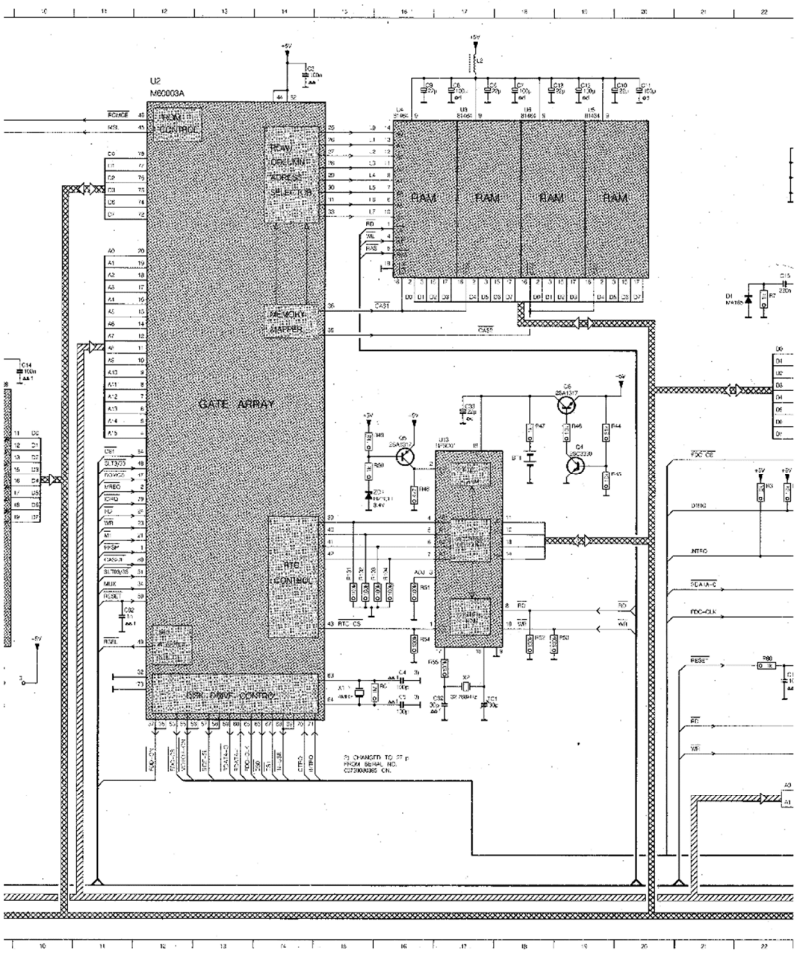
U2
M60003A
GATE ARRAY
RAM
RAM
RAM
RAM
RTC CONTROL
RTC CS
FDC CS
INTRO
FDC-CLK
RESET
RT
WR
CAST
CAST
+5V
-5V

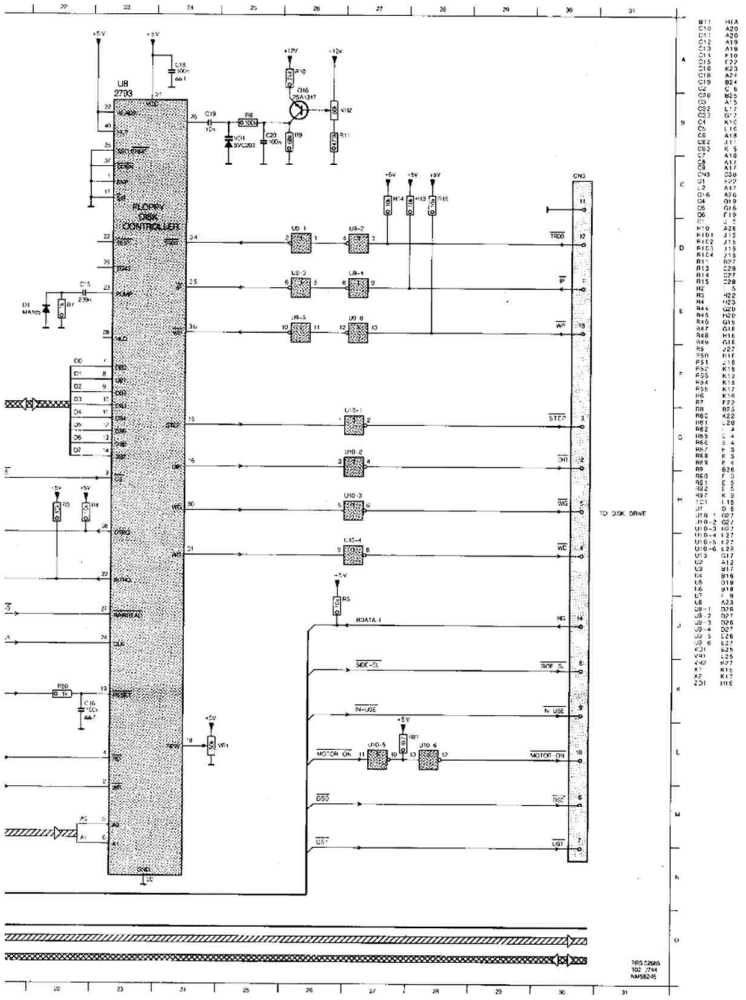
U8
2793
FLOPPY
DISK
CONTROLLER
TO DISK DRIVE
STEP
IN-USE
MOTOR ON
DSO
UST

CS 11 837

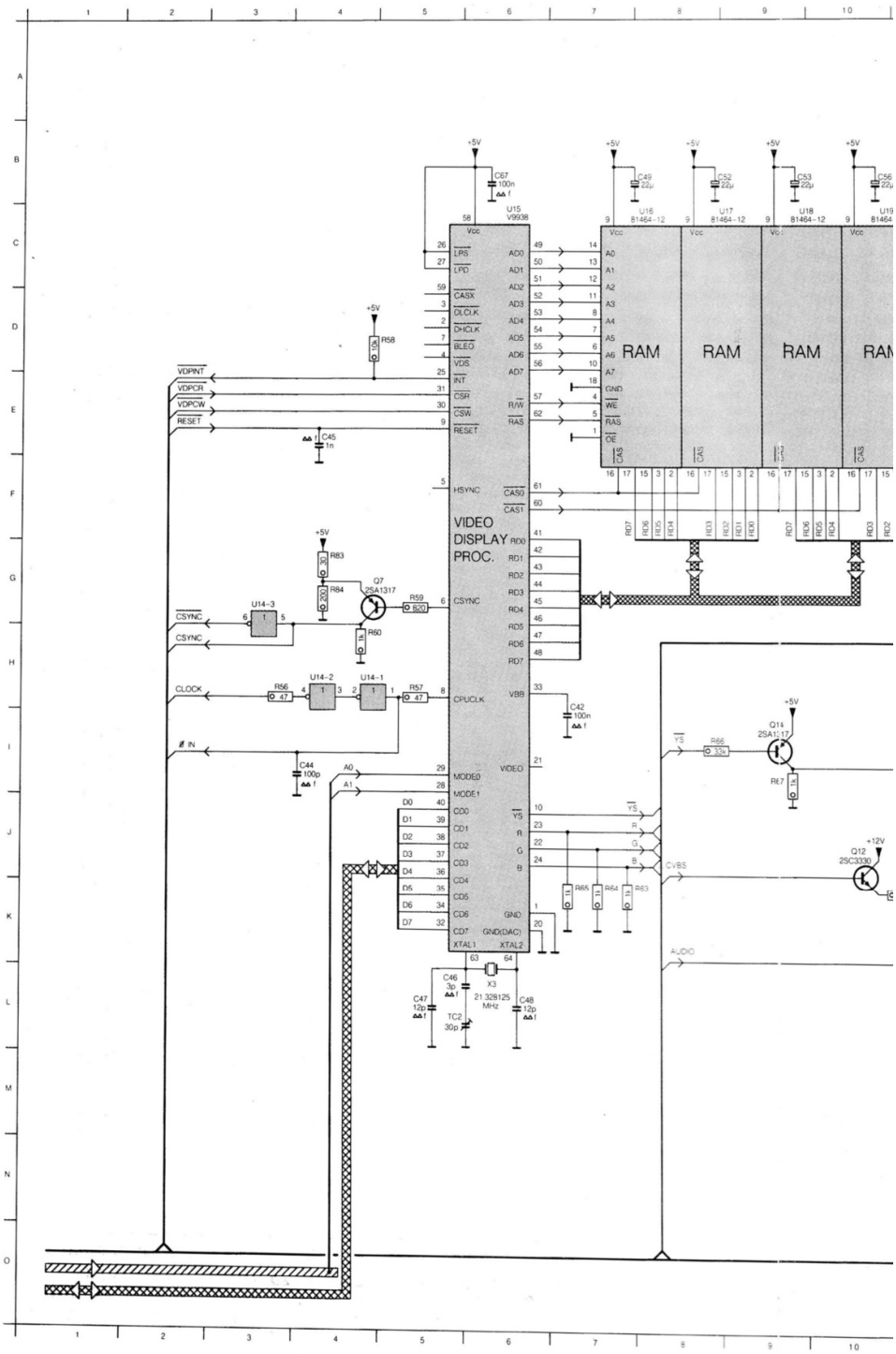
U15
V9938
VIDEO
DISPLAY
PROC.
U16
81464-12
U17
81464-12
U18
81464-12
RAM
RAM
RAM
VDPINT
VDPCR
VDPCW
RESET
HSYNC
CSYNC
CLOCK
CPUCLK
VIDEO
CVBS
AUDIO
Q7
2SA1317
Q14
2SA1017
Q12
2SC3330
X3
21.328125
MHz
+5V
+12V

CS 11 838

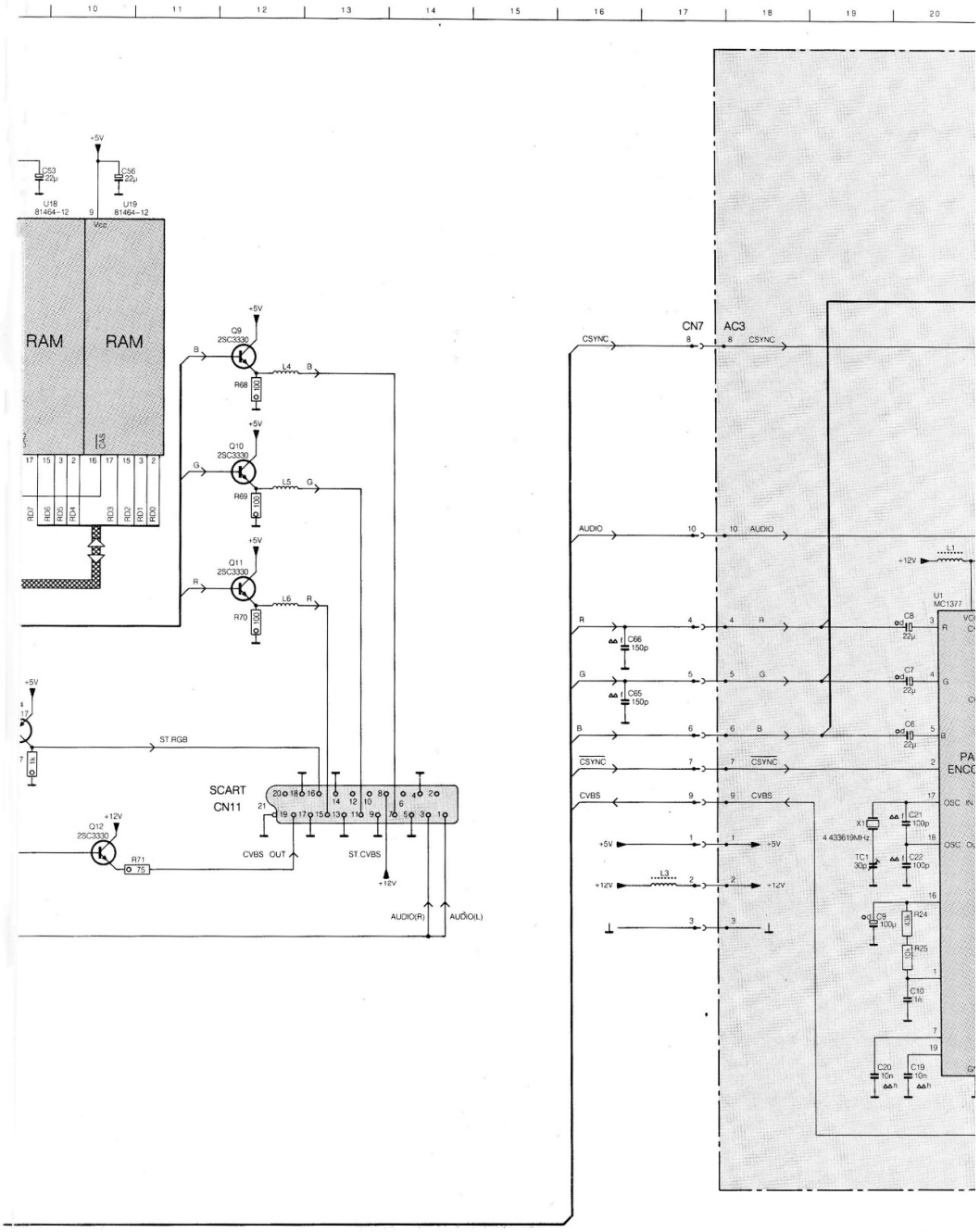
RAM
RAM
U18
81464-12
U19
81464-12
Vcc
CAS
Q9
2SC3330
Q10
2SC3330
Q11
2SC3330
Q12
2SC3330
R68
R69
R70
R71
L4
L5
L6
ST.RGB
SCART
CN11
CVBS OUT
ST.CVBS
AUDIO(R)
AUDIO(L)
CN7
AC3
CSYNC
AUDIO
CVBS
U1
MC1377
X1
4.433619MHz
TC1
30p
L1
L3
C66
150p
C65
150p
C8
22µ
C7
22µ
C6
22µ
C21
100p
C22
100p
C9
100µ
C10
1n
C20
10n
C19
10n
R24
R25

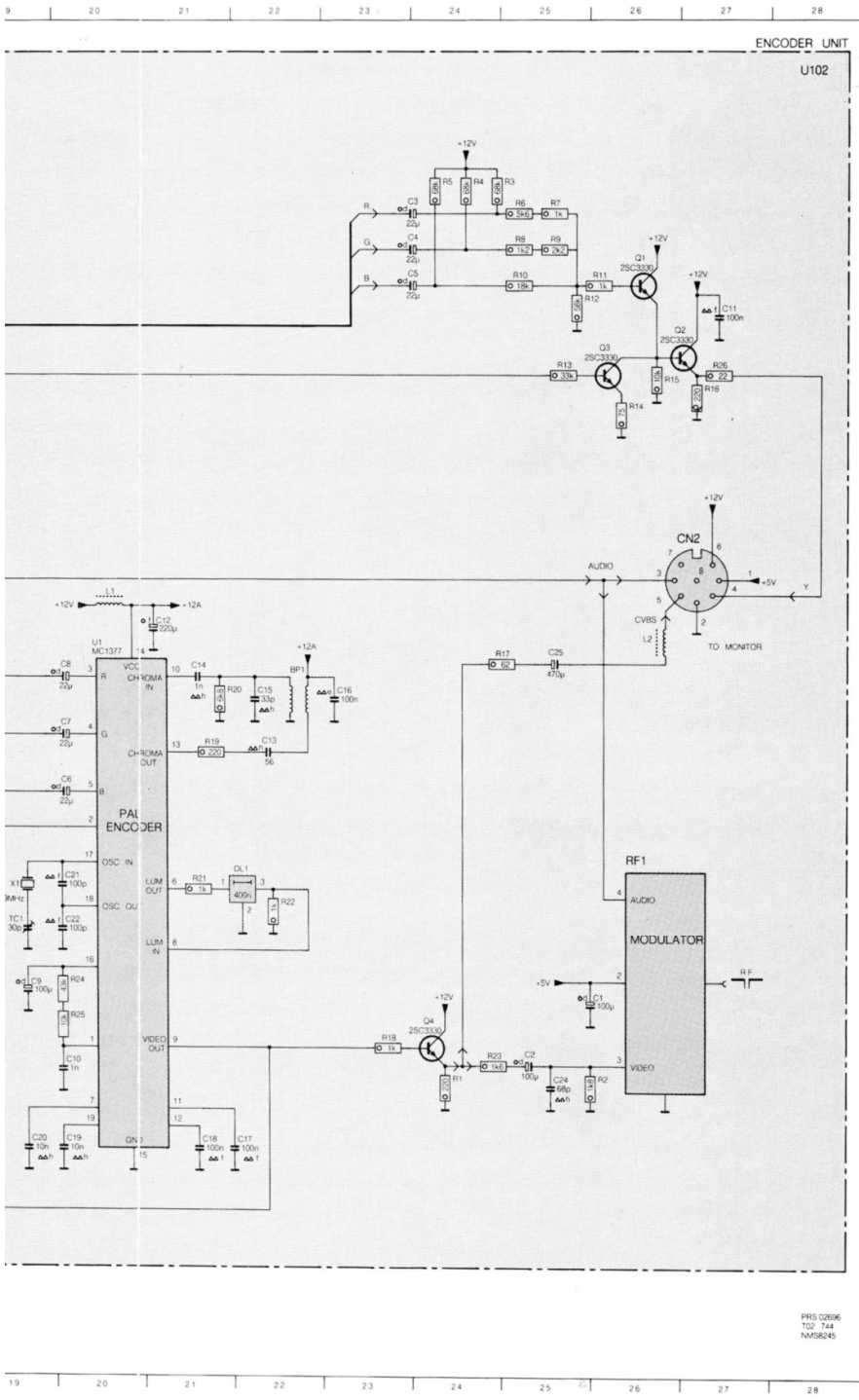

BP1	H22
C1	K26
C10	L20
C11	D27
C12	G21
C13	H22
C14	H21
C15	H22
C16	H23
C17	M22
C18	M21
C19	M20
C2	L25
C20	M19
C21	J20
C22	J20
C24	L25
C25	G25
C3	B24
C4	C24
C42	H 7
C44	I 4
C45	E 4
C46	L 5
C47	L 5
C48	L 6
C49	B 8
C5	C24
C52	B 9
C53	B10
C56	B10
C6	I 20
C65	H16
C66	H16
C67	B 6
C7	H20
C8	H20
C9	K19
DL1	J22
L1	G20
L2	G26
L3	K17
L4	E12
L5	F12
L6	G12
Q1	C26
Q10	F12
Q11	G12
Q12	J10
Q14	I 9
Q2	D26
Q3	D26
Q4	L24
Q7	G 5
Q9	D12
R.F.	K27
R1	L24
R10	C25
R11	C26
R12	C26
R13	D25
R14	E26
R15	D26
R16	D27
R17	G25
R18	L23
R19	H21
R2	L26
R20	H21
R21	J21
R22	J22
R23	L24
R24	K20
R25	L20
R26	D27
R3	B25
R4	B24
R5	B24
R56	H 3
R57	H 5
R58	D 5
R59	G 5
R6	B25
R60	H 5
R63	K 8
R64	K 7
R65	K 7
R66	I 8
R67	I 9
R68	E12
R69	F12
R7	B25
R70	H12
R71	J11
R8	C25
R83	G 4
R84	G 4
R9	C25
RF1	J26
TC1	J19
TC2	L 5
U1	G20
U14-1	H 4
U14-2	H 4
U14-3	G 3
U15	C 6
U16	C 8
U17	C 9
U18	C10
U19	C10
X1	J19
X3	L 6

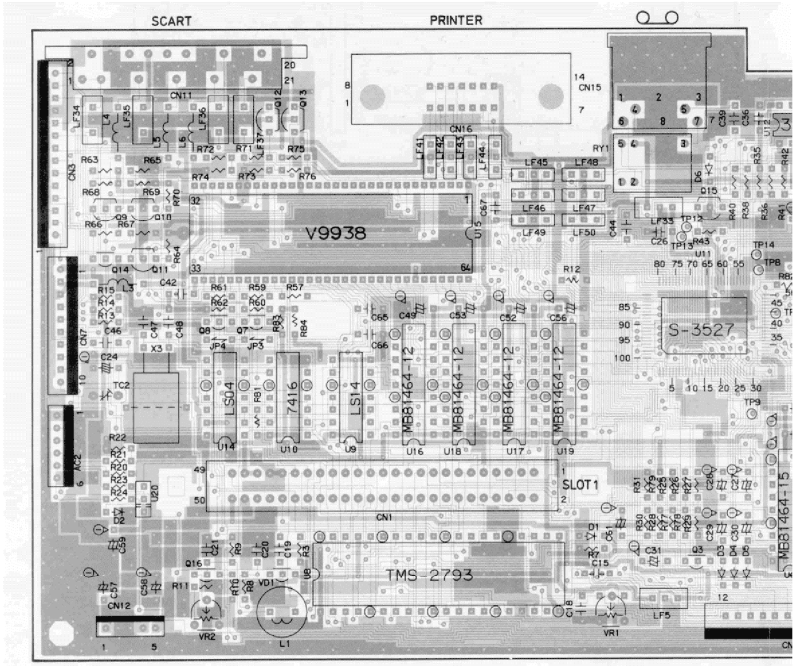
SCART
PRINTER
V9938
S-3527
TMS-2793
SLOT1
MB81464-12
MB81464-15
LS04
7416
LS14

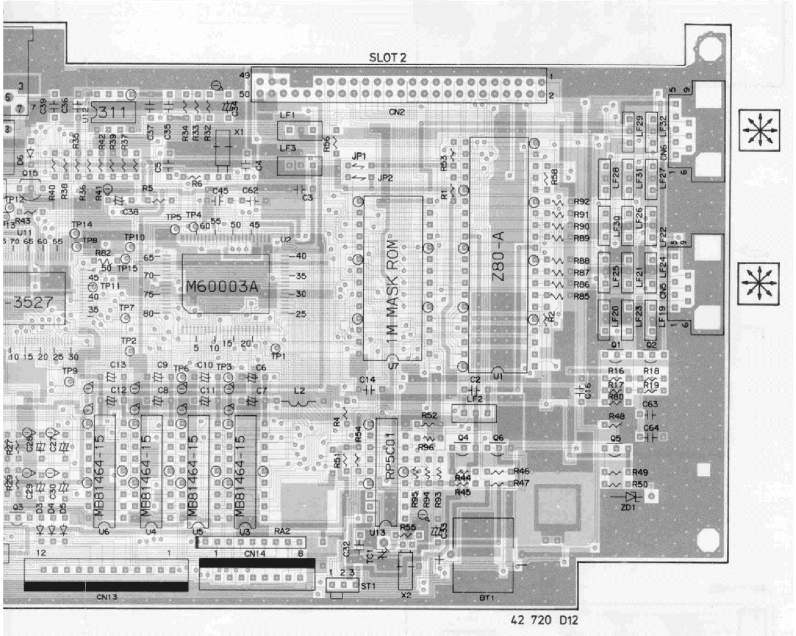
SLOT 2
M60003A
1 M MASK ROM
Z80-A
RP5C01
MB81464-15
-3527

42 720 D12

POWER SUPPLY

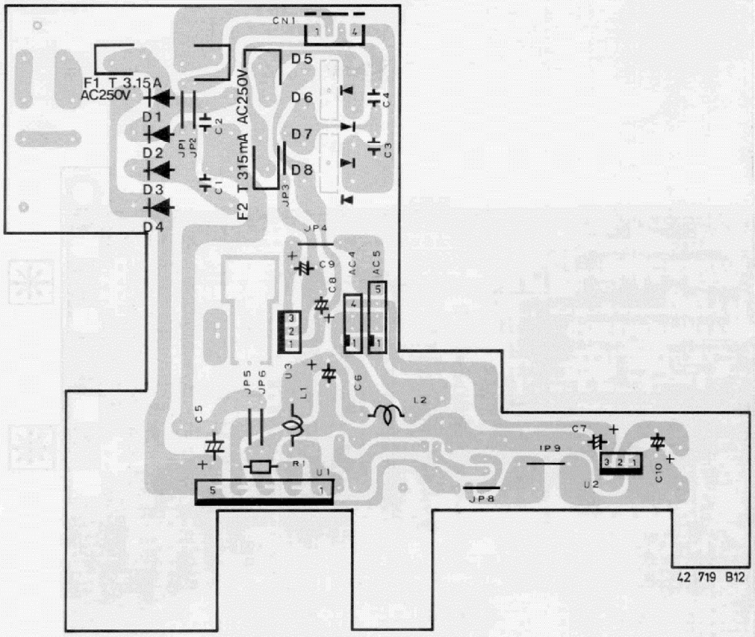

LED PANEL

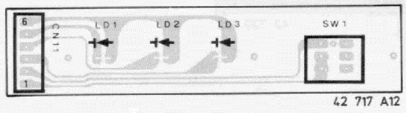

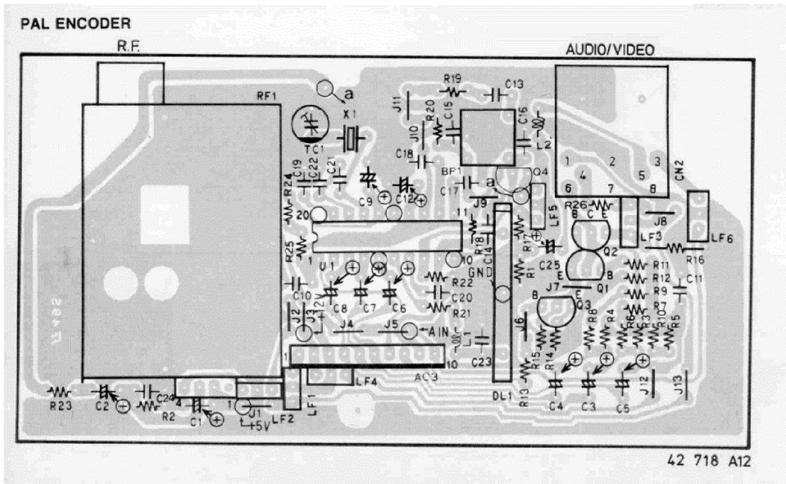
PAL ENCODER
R.F.
AUDIO/VIDEO
RF1
X1
TC1
J11
R19
C13
R20
C15
C16
L2
J10
C18
BP1
Q4
C17
J9
R24
C19
C22
C21
C9
C12
R25
U1
C10
C8
C7
C6
J2
J3
+12V
J4
J5
AIN
R22
C20
R21
GND
C14
R18
R17
R1
C25
LF5
R26
Q2
Q1
J7
Q3
J6
R15
R14
R13
C4
C3
C5
J12
J13
R11
R12
R9
R7
R8
R6
R5
R4
R3
R2
C11
R16
LF3
J8
LF6
CN2
C23
DL1
AC3
LF4
LF1
LF2
J1
+5V
R23
C2
C24
R2
C1
42 718 A12

MAIN PRINTED BOARD

U100	Main printed board /00/16 [1]	4822 219 81089
U1	Z80A	4822 209 10569
U2	M60003A	4822 209 71325
U3	81464-12	4822 209 83426
U4	81464-12	4822 209 83426
U5	81464-12	4822 209 83426
U6	81464-12	4822 209 83426
U7	ROM/00/16	4822 209 72581
U8	2793	4822 209 11146
U9	74LS14	5322 209 85199
U10	7416	5322 209 84035
U11	S-3527	4822 209 11097
U12	UPC311	5322 209 85503
U13	RP5C01	4822 209 83431
U14	74LS04	5322 209 81625
U15	V9938	4822 209 83425
U16	81464-12	4822 209 83426
U17	81464-12	4822 209 83426
U18	81464-12	4822 209 83426
U19	81464-12	4822 209 83426
U20	MN1280	4822 209 83414
RA2	8x4k7	4822 116 90191
VR1	50 k Trimmer	4822 100 11106
VR2	10 k Trimmer	4822 100 11105
Q1-Q4	2SC3330	4822 130 60945
Q5-Q7	2SA1317	4822 130 60944
Q9-Q12	2SC3330	4822 130 60945
Q14	2SA1317	4822 130 60944
Q15	2SA720A	4822 209 11045
Q16	2SA1317	4822 130 60944

D1-D6	MA165	4822 130 32362
ZD1	HZ3CLL	4822 130 33009
VD1	Vari. cap SVC203-M	4822 125 11009

C6 ,C9	Tantal	22 µF 16 V	4822 124 10527
C10,C13			
C15	Mylar	220 nF 50 V	4822 121 42931
C19	Mylar	10 nF 50 V	4822 121 90038
C35,C39	Mylar	22 nF 50 V	4822 121 42417
C37,C64	Mylar	3n3 50 V	4822 121 42784
C49,C52	Tantal	22 µF 16 V	4822 124 10527
C,53,C56			
TC1,TC2	Trimmer	30 pF	4822 125 50299

VARIOUS

X1	4 MHz	4822 242 72073
X2	32.768 kHz	4822 242 71345
X3	21.328125 MHz	4822 242 71347
BT1	NI-CD accumulator	4822 138 10235
RY1	Relay	4822 280 60514
ST1	Service jumper	4822 276 11572

1) Install jumper JP2 and remove jumper JP1 for /16 version.

POWER SUPPLY

U---		
U101	Power supply board	4822 219 81091
U1	STR2005	4822 209 70871
U2	UPC7812HF	4822 209 72579
U3	MC7812CT	4822 209 81726
D1–D4	S2V–10	4822 130 32814
D5–D8	MPG06G	4822 130 80631
L1	Coil	4822 157 52805
L2	180 µ	4822 157 53326

LED PANEL

U---		
U103	Complete LED panel	4822 219 81118
LD1	LED yellow	4822 130 32984
LD2	LED green	4822 130 32983
LD3	LED green	4822 130 32983

VARIOUS

SW1	Reset switch	4822 277 10862
	Reset knob	4822 410 24402

U---		
U102	Encoder unit	4822 219 81092
IC1	MC1377	4822 209 71415
Q1-Q4	2SC3330	4822 130 60945
R24	43k 1%	4822 111 41359
R25	10k 1%	4822 111 41358
C10	1nF 50 V film	4822 121 42945
TC1	30pF trimmer	4822 125 50299

VARIOUS

BP1	Transformer	4822 157 53332
DL1	Delay 400 nS	4822 157 53327
X1	4.433619 MHz	4822 242 72074
	Modulator	4822 212 10215
CN2	Monitor connector	4822 267 50711

FLOPPY DISK DRIVE

U---		
U104	Floppy disk drive	4822 212 22883

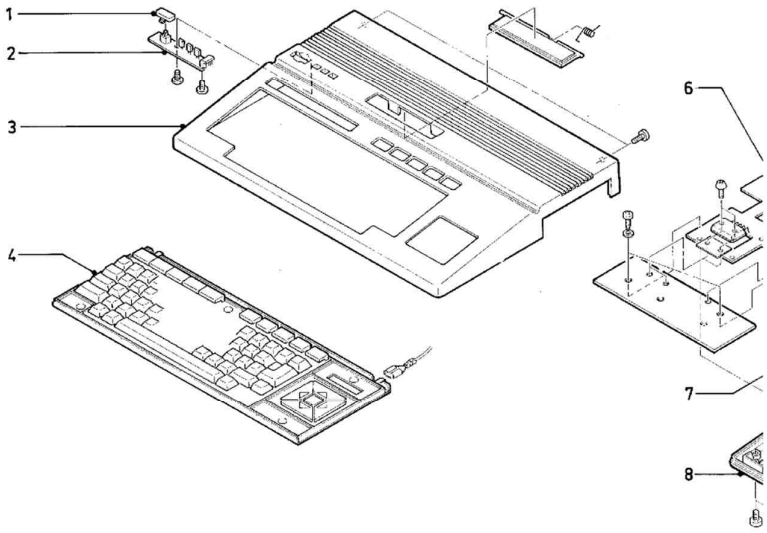

CS 11 842

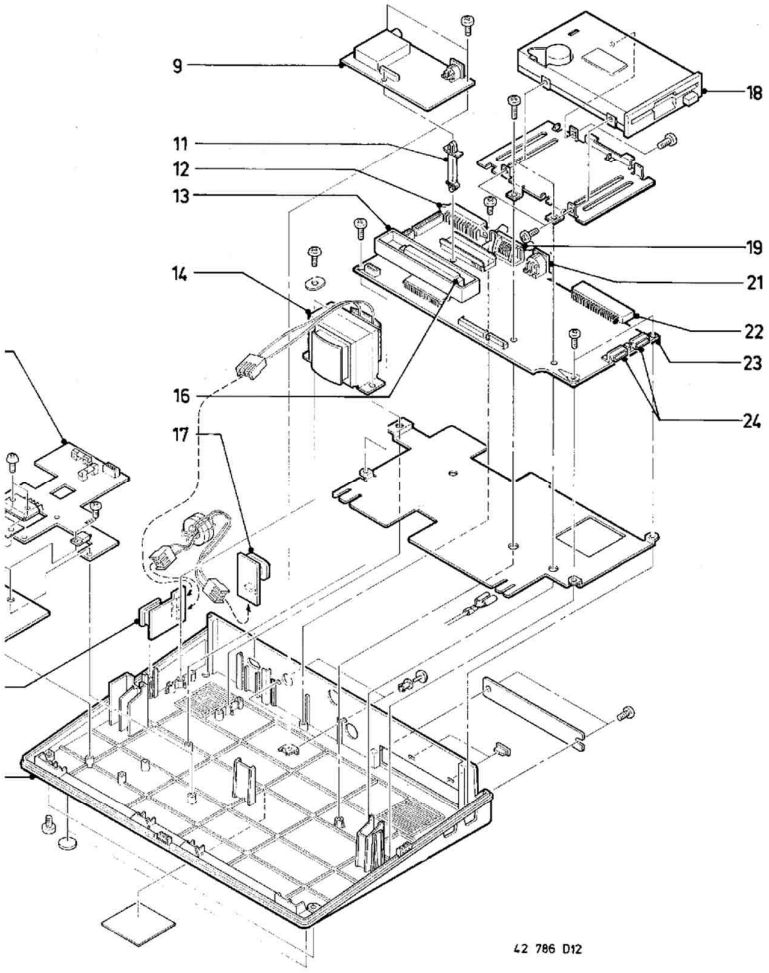
9
18
11
12
13
19
14
21
22
23
16
24
17
42 786 D12

MECHANICAL PARTS LIST

1	4822 410 24402	Reset Knob
2	4822 219 81118	LED panel
3	4822 432 10643	Cabinet top case
4	4822 219 81088	Keyboard /00
	4822 219 81093	Keyboard /16
6	4822 219 81091	Power supply
7	4822 276 12322	Mains switch
8	4822 432 10644	Cabinet bottom case
9	4822 219 81092	Encoder unit
11	4822 404 60413	PCB support
12	4822 267 50604	SCART connector
13	4822 404 60412	Slot guide
14	4822 146 30646	Transformer
16	4822 267 60167	Connector (50p)
17	4822 265 20264	AC inlet
18	4822 212 22883	Floppy drive
19	4822 267 50709	Printer connector
21	4822 267 50711	Recorder connector
22	4822 267 70168	Connector (50p)
23	4822 219 81089	Main panel/00/16
24	4822 267 30915	Joystick connector

MEMORY LAY-OUT

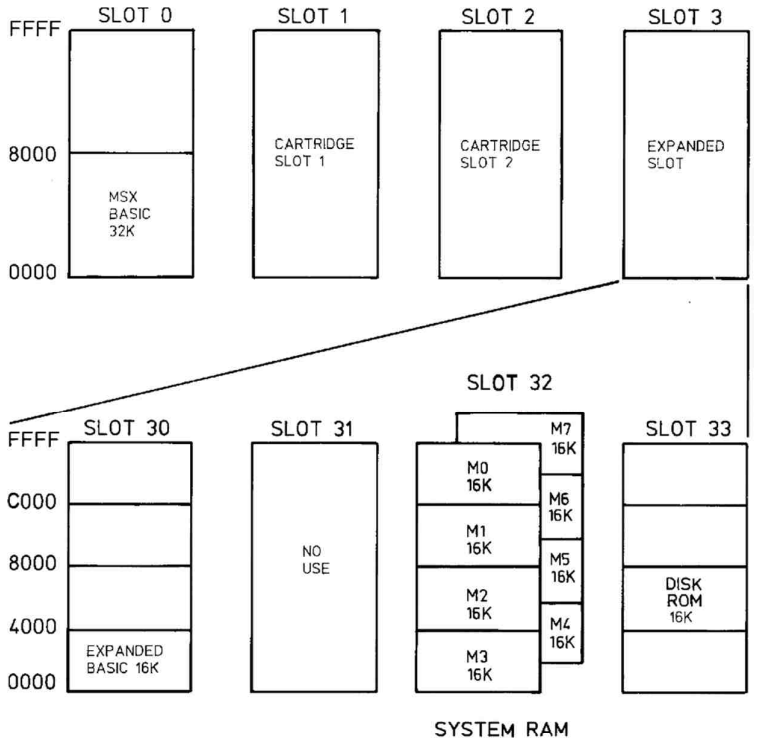

39 300 A13

SYMBOLS USED IN CIRCUIT DIAGRAMS

SYMBOL	TYPE	$P_{70°amb}$	TOLERANCE	SERIES
	SFR16T	0.5	1E - 3M 5%	E24
	SFR25H	0.5	1E - 10M 5%	E24
	MRS25	0.6	1E - 1M 1%	E24
	MR30	0.5	1E - 1M 1% (2%)	E24
	VR37	0.5	220K - 33M 5%	E24
	PR37	1.6	1E - 1M 5%	E24
	VR68	1	100K - 68M 5%	E24
	MRS 16T	0.4	10R – 100K	E24/E96

SYMBOL	TYPE	VOLTAGE DC	TOLERANCE
●●*	POLYESTER FLATFOIL	SEE NOTE	10%
ΔΔ*	PLATE CERAMIC	SEE NOTE	DEPENDING ON CAPACITY
o*	ELCO MINIATURE SINGLE	SEE NOTE	-10+50%
●*	ELCO SINGLE ENDED	SEE NOTE	±20%

NOTE:

*	f = 25V	q = 200V	x = 1000V	E = 20V
	g = 40V	r = 250V	z = 1600V	F = 35V
a = 2.5V	h = 63V	s = 300V	A = 1.6V	G = 50V
b = 4V	j = 100V	t = 350V	B = 6V	H = 75V
c = 6.3V	l = 125V	u = 400V	C = 12V	I = 80V
d = 10V	m = 150V	v = 500V	D = 15V	
e = 16V	n = 160V	w = 630V		
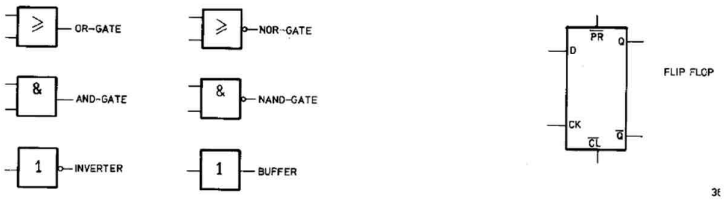
39 301 A13